Operation Instructions of KUM Ultrasonic Level Meter Menu

The KUM Series Ultrasonic Level Meter with Chinese and English menu and simple set, can meet different requirements from customer. Normally, after followed installation instruction, then set several parameters, it will start to work.

Our products can be debugged through three keys on the panel. Then, the measured value is showed by LED.

SET key	▼ ▲ key
◇Enter to menu	◇Move the cursor
◇Confirm menu	◇Select the menu
◇Confirm parameter calibration	◇parameter calibration

1. After switched on it, press the SET key for two second and enter the first level menu.
2. Menu Mode: Expert settings and simple setting

The menu of simple setting is the following table;

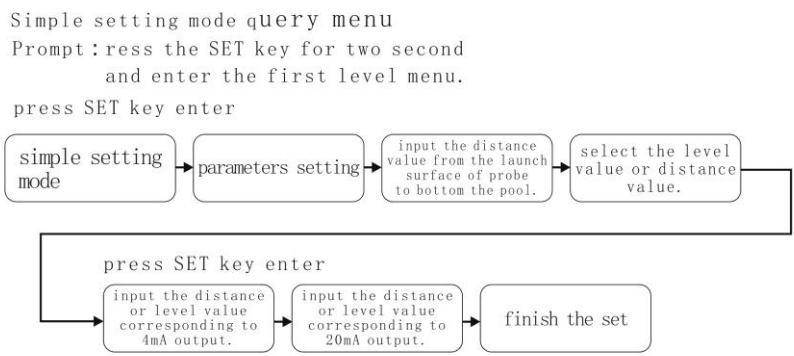

As menu of expert setting, please check the appendix: engineer menu of ultrasonic level meter.

(2)Measurement mode:

Distance measurement and level measurement.

The factory default is level measurement.

(3) The height value of probe input to the “reference zero”(the height of probe is the distance from the launch surface of probe to the bottom).

①For distance measurement, the reference zero is useless. The position of low point range and high point range can check the figure1.1

②For level measurement, the position of reference zero, low point range

and high point range can check the figure 1.2.

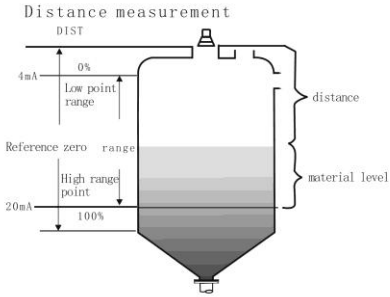

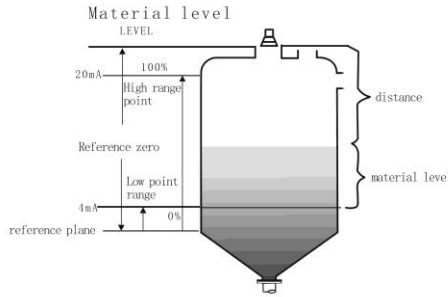

Figure 1.1 Distance measurement Figure 1.2 level measurement

Low point range: the distance value from reference surface to it.

The value is positive (+), when it is higher than reference surface.

The value is negative(-), when it is lower than reference surface.

The level output is 4mA under this set value.

High range point: the distance value from reference surface to it。

The value is positive (+), when it is higher than reference surface.

The value is negative (-), when it is lower than reference surface.

The level output is 20mA under this set value.

4. Work with delay:

Enter alarm setting and set the following three parameters.

①Alarm mode:

High Level Alarm, Low Level Alarm and Closed.

②Alarm value:

High level alarm: the level is higher than alarm value, it alarms

Low level alarm: the level is lower than alarm value, it alarms.

③ Difference value: It is used for preventing alarm switch beating repeatedly which caused by measurement errors near the alarm point.

High level alarm status: the level is lower than (Alarm value -difference), then cancel the alarm.

Low level alarm status: the level is higher than (Alarm value +difference), then cancel the alarm.

5. The probe and algorithm selection, parameter correction should be setting under the guidance of professional and technical personnel.

6. When finished device installation, it must be grounded separately and don't share with the commons of the electrical and instrument box.

7. **Suggestion**: When this model connects interferential devices such as motor, frequency converter, PLC, we'd better put the isolator in the middle of them with grounding. Power supply should increase isolation transformer and the signal part should increase signal isolator. They must be grounded.

★The signal wire doesn't share the wire chase with power cord and electric cable, must install with metal tube individually, or away from the installation of power cord and electric cable. Without the metal tube, it should be more than 1m away from power cord and electric cable.

Illustration：

★: important note, please read carefully and follow them strictly.

▲:common note, please read carefully to avoid the unnecessary trouble.

One. Introduction

The Ultrasonic level meter is instrument of measured material level, which is non-contact, high reliability, cost-effective, easy to install and maintain. It meets the requirements of material level without the contact and owns the independent property rights with development for many years by our company.

Two. Debugging

As different installation environment, please learn the basic information before ultrasonic level meter works, such as measure range, zero point, full range and field conditions and so on.

So set the instrument before the measurement, it can be found in the operation instructions of ultrasonic level meter.

Note: The probe and algorithm selection, parameter Correction, please don't modify them by yourself.

Three. Technical data:

Function	Integrated type	Split type
Range	5m、10m、15m、20m、30m、40m、50m、60m	5m、10m、15m、20m、30m、40m、50m、60m、70m、
Accuracy	1%	1%
Resolution	3mm or 0.1%（bigger）	3mm or 0.1%（bigger）
Display	Chinese and English LED	Chinese and English LED
Analog Output	Four-wire 4～20mA/510 Ω load Two-wire 4 ～ 20mA/250Ω load	4～20mA/510Ω load
Relay Output	Two groups: AC 250V/ 8A or DC 30V/ 5A Status can be programmed	Two groups for single channel Four groups for double channels AC 250V/ 8A or DC 30V/ 5A Status can be programmed
Power supply	Standard:24VDC Optional: 220V AC+15% 50Hz	Standard:220V AC+15% 50Hz Optional:24VDC or 120mA Customize:12VDC or battery
Environment Temperature	LED : -20～+60℃, Probe : 20～+80℃	LED : -20～+60℃, Probe : 20～+80℃
Communication	Option:485,232 Communication (manufactures agreement)	Option:485,232 Communication (manufactures agreement)
Protection Grade	LED: IP65, Probe: IP68	LED: IP65, Probe: IP68
Cable Probe	No	standars:10m longest:100m
Probe installation	According to the range and the probe type	According to the range and the probe type

Power Consumption	Split type Power supply:24V, No relay: 100mA Channel 1 of Relay: 120mA； Channel 2 of Relay: 145mA； Channel 3 of Relay: 170mA； Channel 4 of Relay: 190mA； The specific power is as follows: No relay: 24×100mA=2.4W； Channel 1 of Relay: 24×120mA=2.9W； Channel 2 of Relay: 24×145mA=3.5W； Channel 3 of Relay: 24×170mA=4.1W； Channel 4 of Relay: 24×190mA=4.6W；
Power Consumption	Integrated type(four-wire system) Power supply:24V, No relay: 80mA Channel 1 of Relay: 105mA； Channel 2 of Relay: 130mA； The specific power is as follows: No relay: 24×80mA=1.9W； ； Channel 1 of Relay: 24×105mA=2.5W； Channel 2 of Relay: 24×130mA=3.1W；
Power Consumption	Integrated type(two-wire system) Power supply:24V, No relay: 30mA The specific power is as follows: No relay: 24×30mA=0.72W

Note:
Ultrasonic probes can also be customized according to customer need in this series: high pressure and high temperature resistant, light, small diameter, small blind area and other special regulatory probes.

Four. Installation

4.1 Installation dimension of level meter

(1) Split type

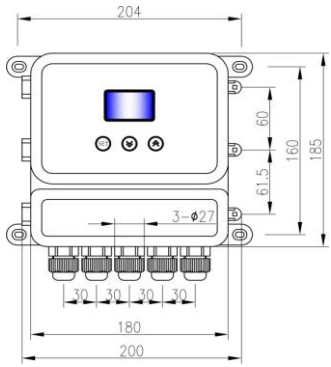

Figure 4-1 Structure of product

(2)Integrated Type

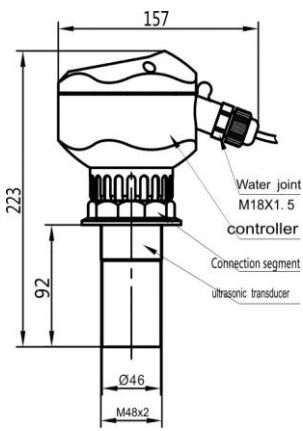

Figure 4-2 Thread of sensor (M48×2)

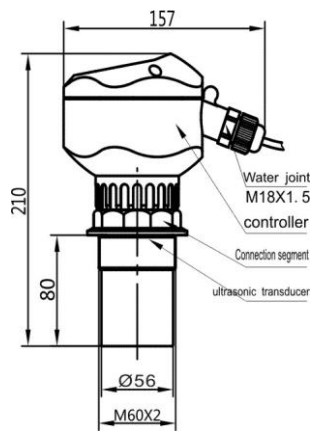

Figure 4-3 Thread of sensor (M60×2)

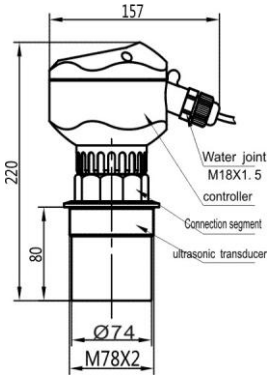

Figure 4-4 Thread of sensor (M78×2)

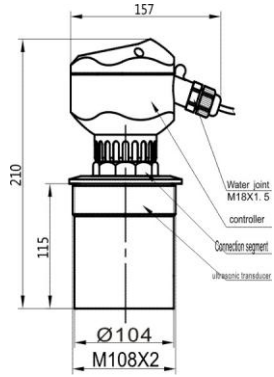

Figure 4-5 Thread of Sensor (M108×2)

(3) Integrated Type (Explosion-proof Model):

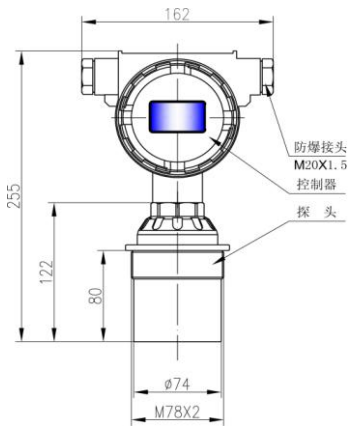

Figure 4-6 Structure of product

4.2 Installation Guide

4.2.1 Terminology explanation

① Range is so important when you choose our products, please check the following photos.

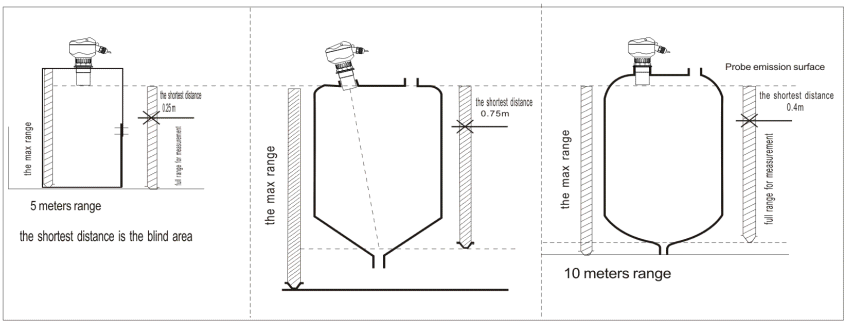

②Launch angle and false echo

When the ultrasonic wave speed is focused by probe, the launch of impulse wave speed is the same as the speed light of flashlight. The place is farther away from probe, their proliferation area will be greater.

All the objects in the launch angle, such as pipes, brackets, seam, reinforced, mixing propellers and wall objects, will cause strong false echoes, especially the objects of near distance between launch angle and the probe.

For example: The false echoes which is away from probe 6m is more powerful than away from probe 18m by nine times.

★Make axis of the sensor is perpendicular on the media surface as much as possible, and move any other objects in the launch angle (such as: pipes and brackets).

4. 2. 2 Selection measure range

Measure range depends on the range of ultrasonic probe. The ultrasonic probe depends on the work environment, measured object, the temperature at the scene.

According to the following table, you can select the measure range you need.

Liquid Level	Multiple attenuation	Percentage of decay	Plus multiple range
smooth	0dB	0%	No
corrugated	5...10dB	50～67%	1 time of range
Large fluctuations (such as mixing blades)	10...20dB	90%	3 times of range

Material surface	Multiple attenuation	Percentage of decay	Plus multiple range
Hard, rough (such as the granulated rubber)	40dB	99%	10 times of range
Soft(such as coal, cement, fly ash)	40...60dB	99～99.9%	Not recommended

Dust	Multiple attenuation	Percentage of decay	Plus multiple range
No	0dB	0%	No
little	5dB	50%	1 time of range
A lot of	5...20dB	50～90%	3 times of range

Material	Multiple attenuation	Percentage of decay	Plus multiple range
No	0dB	0%	No
little	5...10dB	50～67%	1 time of range
A lot of	10...40dB	67～99%	3 times of range

Fog	Multiple attenuation	Percentage of decay	Plus multiple range
No	0dB	0%	No
little	5...10dB	50～67%	1 time of range
A lot of	10...20dB	67～90%	3 times of range

Steam	Multiple attenuation	Percentage of decay	Plus multiple range
No	0dB	0%	No
Little	5...10dB	50～67%	1 time of range
A lot of	10...20dB	67～90%	3 times of range

Temperature difference of probe and media surface	Multiple attenuation	Percentage of decay	Plus multiple range
≤20℃	0dB	0%	No
≤40℃	5...10dB	50～67%	1 time of range
≤80℃	10...20dB	67～90%	3 times of range

If there are many situations, so the calculation method of signal attenuation is put them together.

- Little material 5...10dB
- Little steam 5...20dB
- Temperature difference of probe and media surface≤40℃ 5...10dB

Total Min is15dB，Max is 40dB。

Based on it, if the actual range is 5m, you need to choose the range of 50m.

4. 2. 3 Bottom thread installation

▲**Suggestion**: Install with the plastic flange

①Install the flange on the measured object.

②Put the gasket of same inner diameter on the flange.

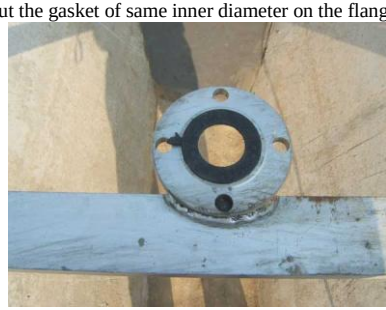

③Transducer aimed at the hole of flange

④put it into the hole.

⑤Bottom flange

⑥Put the gasket of same inner diameter under the flange.

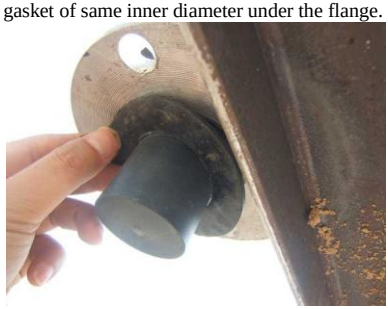

⑦Screw the nut and fix the transducer

⑧ Finished installation of transducer

4. 2. 4 Top thread installation

① fix the top thread with the nut

② the connected the probe with protection tube

▲If installation on the cans, pool, covers and holder, the same as the above photo.

★After finished the installation of probe, the launch surface of probe must reveal the cover or waveguide.

4.2.5 Liquid measurement

4.2.5.1 Flat tank

Flat tank usually has a short connected tube. There is datum of the connected tube under the flange. The connected tube length ≤ 60mm,inner diameter of connected tube≥ 100mm,inner wall of connected tube is smooth(No burrs, raised), after installation it can be measured when the launch surface of probe should be lower than under the flange by 3cm.

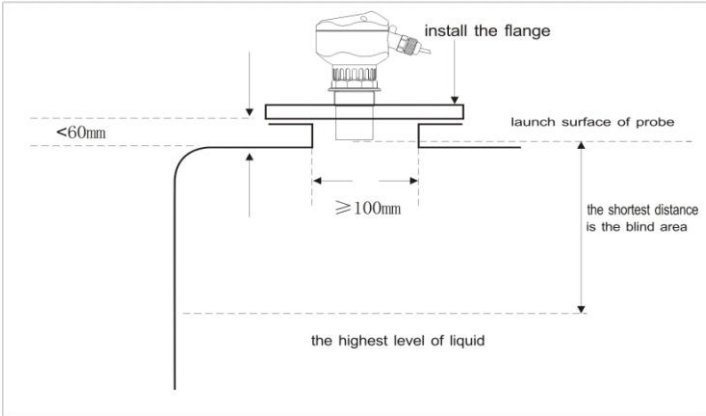

flange installation in the short connected tube

The best installation method put the sensor install on the flat container without the connected tube. The circle opening of container can fix the flange and gimbals.
The launch surface of probe is under the datum.

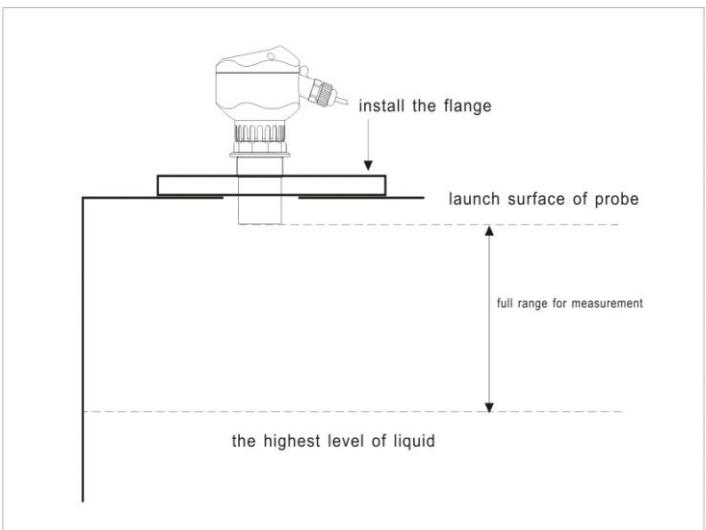

flange installation on the flat container

When the connected-tube thread is the same as the probe, so the inner diameter of connected-tube is nearly the same as the external thread.
In this case, the launch surface of probe must be higher than connected tube by more than 2cm and can't shrink in the connected tube.

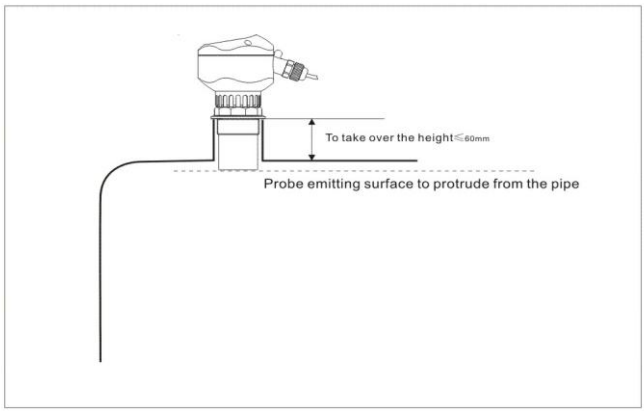

Probe installation on the connected-tube of thread

Split sensor installs on the top of thread, the position is the pipe thread of M30×1.5.

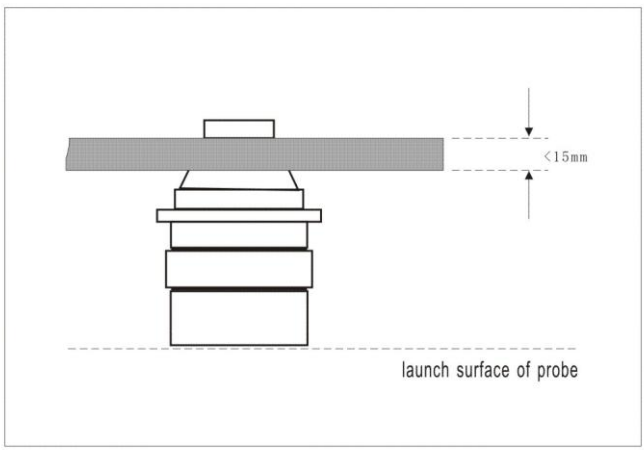

Thread connection on the top of split type probe

4.2.5.2 Arched tank

For the arched tanks, it will be better not to install the center of top tank, but installed position which is 1/2 or 2/3 of radius in the top tank (the requirement is have a distance which is away from the tank wall). Because the top arched tank just like a convex lens, if the probe installed on focus point of convex lens, ultrasonic pulses will receive all the false echoes. We should avoid to install in the center of top arched tank.

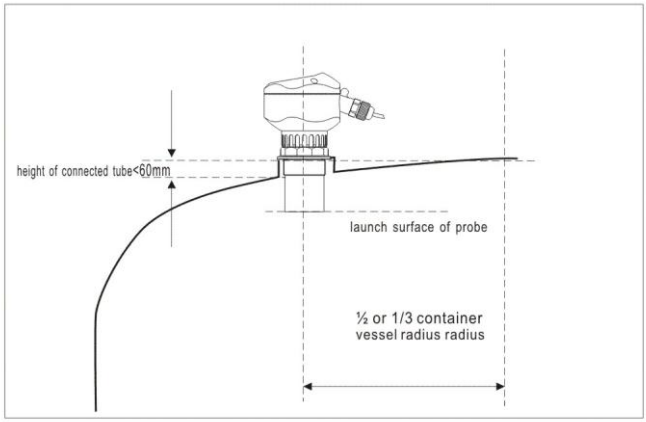

installation on the connected tube of thread—the top of Arched tank

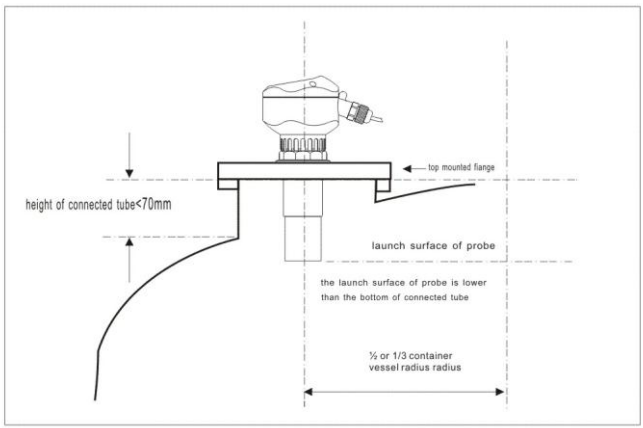

installation on the flange --- the top of Arched tank

On top of the most arched tank, the length of connected tube and flange together is 150-180mm, however, the length of bottom probe thread is not so long, (maximum probe can be customized by our company, to enable launched surface of probe less than the bottom connected-tube), then we need to check ratio between the diameter and the length of connected tube .Please check the following table shows them.

Number	Length	Diameter	Note
1	150mm	200mm	Inner wall of connected tube (No burr and raised object) should be upper and lower vertical, and the weld to be polished. The connection point between the connected-tube and top tank is to be polished by 45° bevel of connected-tube inside and
2	200mm	260mm	
3	250mm	325mm	
4	300mm	360mm	

			outside.

4. 2. 5. 3 Opening container

As opening container, we can use the bracket to install (pay attention to the bracket's bearing capacity), and maintain some distance between sensor and container wall. If the container wall is flat, then the distance from sensor to the container wall is in the following table:

Max range	Distance	Max range	Distance	Max range	Distance
5m	0.5m	10m	1m	15m	1.5m
Max range	Distance	Max range	Distance	Max range	Distance
20m	2m	30m	3m	40m	4m

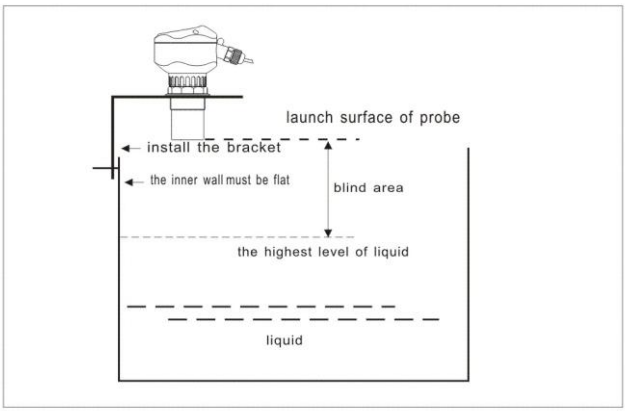

Bracket installation of one side on the top of open containers

Due to open containers have no focus effect, you can install the sensor in the middle of the container.

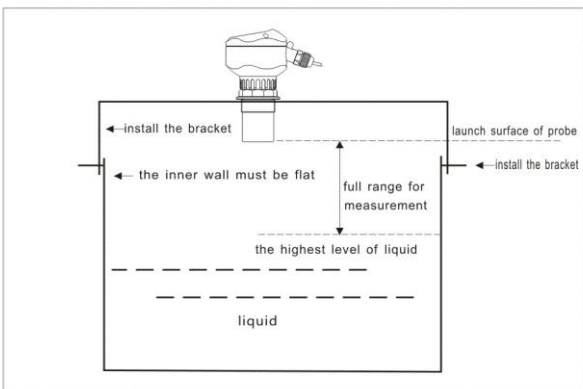

Bracket installation of on the middle top of open containers

4. 2. 5. 4 Drainage and normal wells

As drainage wells, the way of well and wellhead are narrow and the wall is not flat. This makes the ultrasonic measurement so difficult. This problem can be resolved by installed a part of connected-tube or whole bushing.

Note: After put the sensor in the connected-tube, the blind area will be bigger (about 50～100%), please consider it.

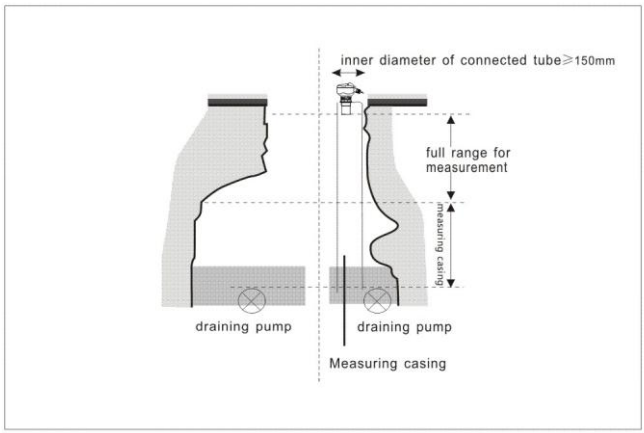

connected tube and bushing for drainage wells Measurement

Normal wells (including water wells, deep wells) don't have large diameter. So you can install measured bushing to achieve the best result. Inner wall of bushing must be smooth (PVC, PE pipe can be used), inner diameter≥150mm (measure range 10 m) or diameter ≥200mm (measure range 20 m).

As long as the measuring pipe keep clean (no adhesive media), it can be measured. The measured bushings never soak in the media or soak in the media all the time, so it can guarantee accuracy of measurement.

4. 3. 1 Solid measurement

4. 3. 1. 1 Installation flange

The installation method is the same as liquid measurement. It can install on the flange which joint the connected tube of container. The axis must aim to container outlet or perpendicular to the media surface, the probe should be able to come out of the connected-tube.

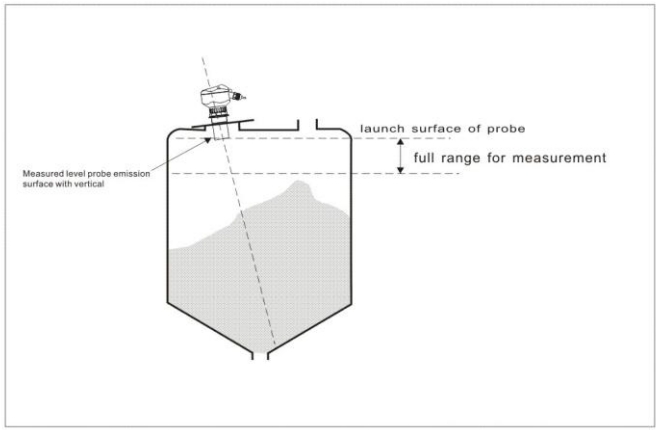

installation of integrated sensor is on the flange of container

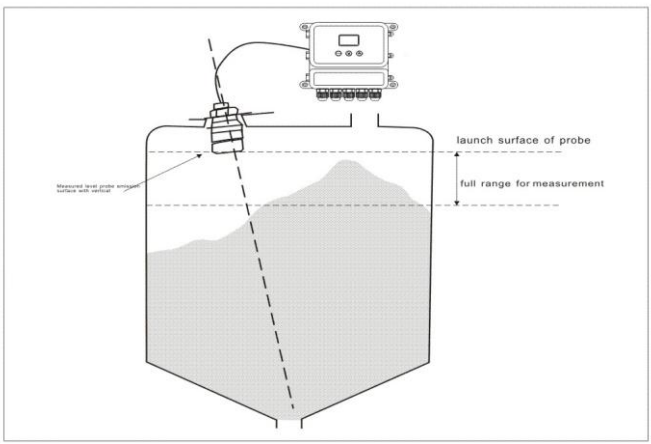

installation of split sensor is on the flange of container

4. 3. 1. 2 Thread connected tube installation

When installation with the thread connected tube, the probe must be higher than bottom of connected-tube by more than 2cm.

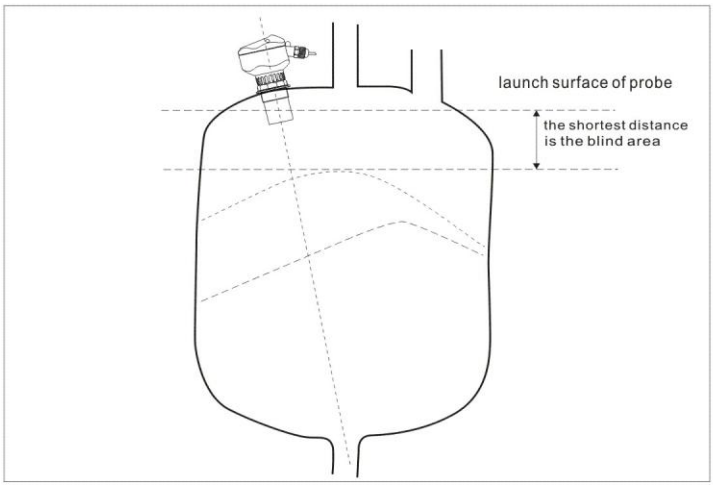

integrated sensor--installation of connected tube thread

4. 3. 1. 3 Dragon door frames installation

For open containers, it can adapt dragon door frames installation. The axis of connected tube must aim to the outlet of container or perpendicular to the media surface.

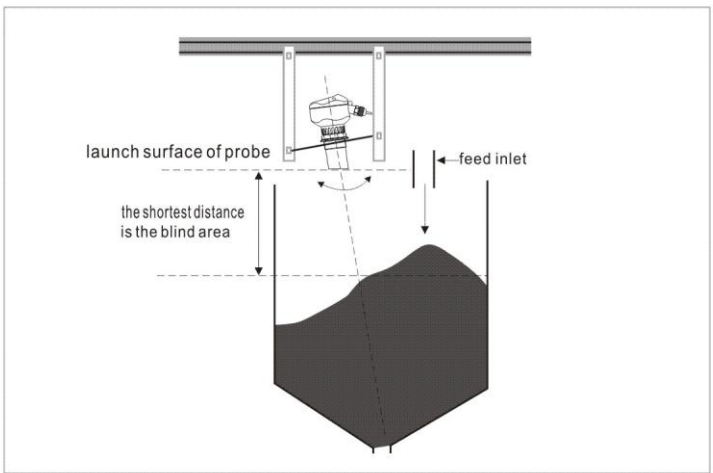

integrated sensor-- --Dragon door frames installation

When installation of outdoor stock piles, the large one needs more instruments for measurement.The instrument should fix on the derrick and the probe should aim to the media surface.

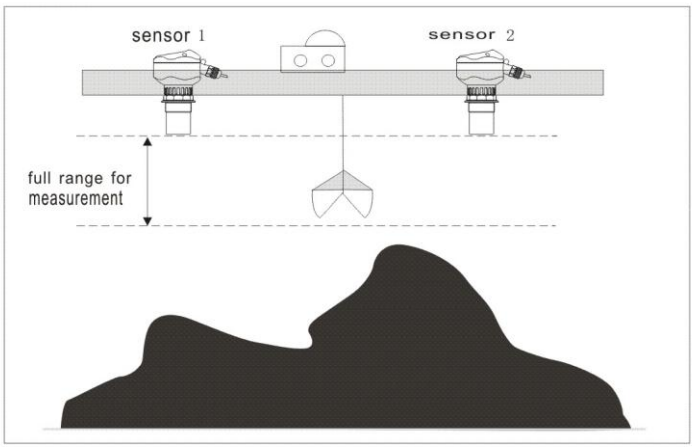

outdoor stock piles measurement- installation of the derrick

4. 3. 2 Extended connected-tube

Blind area means kept small distance between probe and measured media.

Sometimes on the scene can't keep that, so we need to install the extended connected-tube on the container.

4. 3. 2. 1 Extended connected-tube for measured liquid

Try to make the inner wall of connected-tube smooth and the connected tube don't soak in the media to prevent media from adhering and polluting of connected tube.

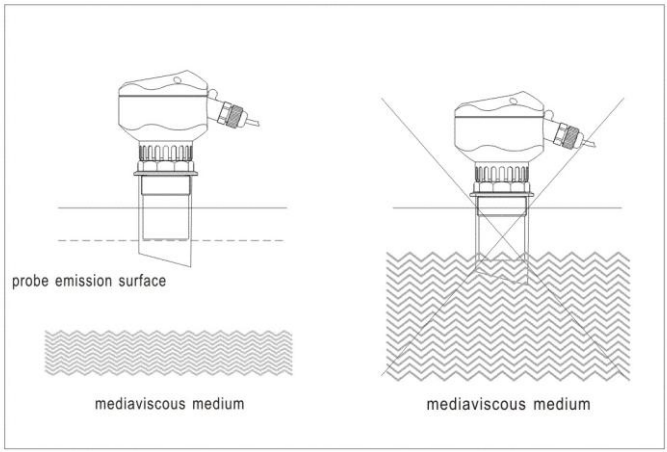

the connected tube can't soak in the adhering

For non-adhesiveness, extend connected tube can soak in the media for a long time(non-corrosion by the liquid and no debris adhesion on the pipe wall) so that the measurement is more accurate, because the measurement isn't effected by other devices within the container.

Inner diameter of connected tube should be large and oblique incision keeps smooth.

The relationship between length (L) and inner diameter (ID) of connected tube showed by the following table.

No.	L	ID	Note
1	150mm	200mm	Inner wall of connected tube (No burr and raised object) should be upper and lower vertical, and the weld to be polished. The connection point between the connected tube and top tank is to be polished by 45° bevel of connected tube inside and outside.
2	200mm	260mm	
3	250mm	325mm	
4	300mm	360mm	
5	350mm	455mm	

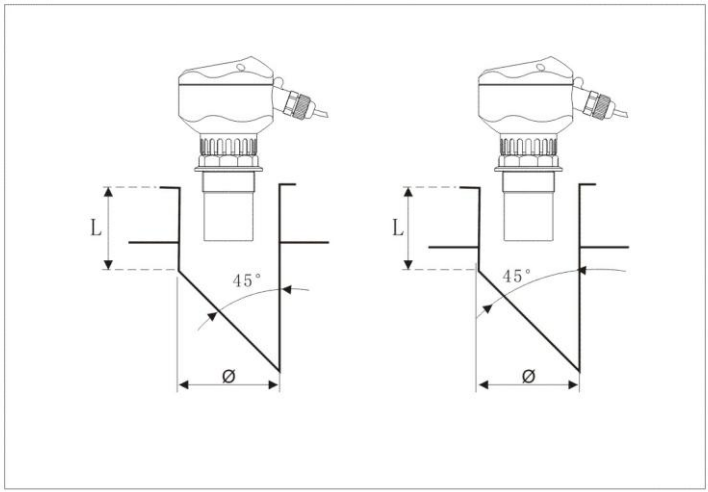

the extend connected tube without soaking in the media

Extend connected tube is installed from the top to bottom, the relationship between the diameter and range is following table.

Max Range	Mini diameter	Max Range	Mini diameter
5m	100mm	10m	150mm
Max Range	Mini diameter	Max Range	Mini diameter
15m	200mm	20m	200mm

4. 3. 3. 2 Extended connected-tube for measured solid

If the media is solid, which is different from the liquid measurement, then we should use conical extended connected-tube with 25° -30° angle.

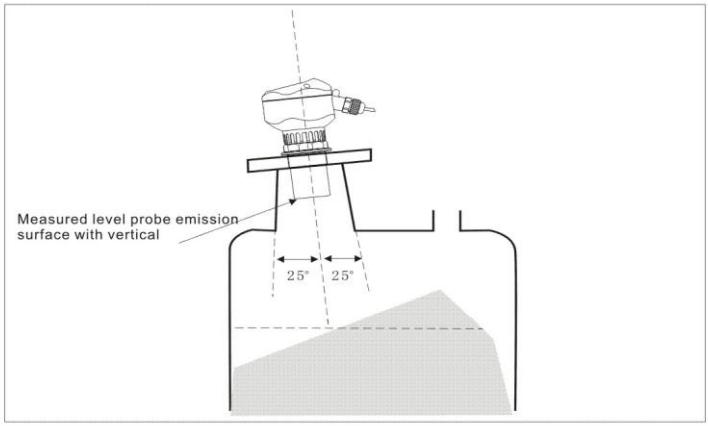

the extend connected tube for solid measurement

4. 3. 3 Installation of avoiding false echoes.

4. 3. 3. 1 Devices and Installation in the container

When install the sensor, please don't block the ultrasonic beam with other devices.

Protrusions on the surface of the container will have greater impact for measurement, we can place baffle in the protrusions position to make the false echo refract away, so as to ensure accurate measurement.

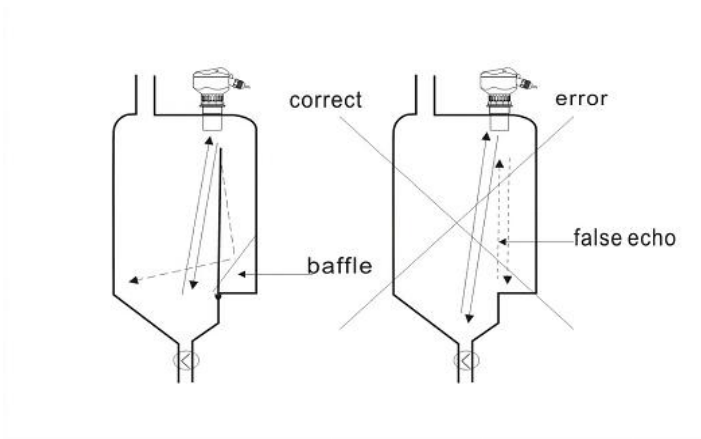

Container steps clear of obstacles–add more inclined the rung of the false echo refraction

If the object's surface is flat under the container, which used for outlet of different medium, so we need to block them with deflector of some angle.

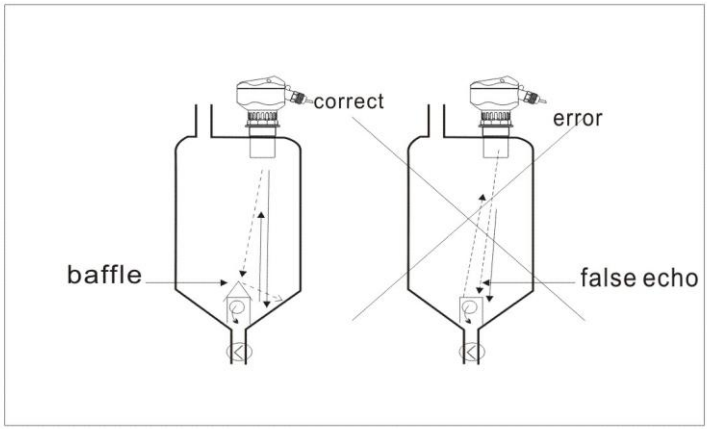

when the protrusions are under the container, it must use the deflector

Devices in the container (such as pipes, brackets) will effect the measurement.

On the design of measurement point, please note that within the scope of the proliferation of ultrasonic signal mustn't have other devices.

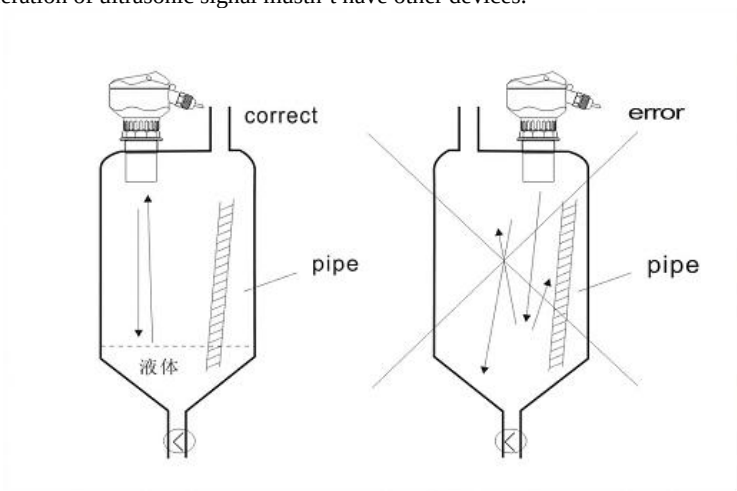

Devices in the container- --pipe

Do not install the sensor above the filling material or in it, should keep distance away from inlet.

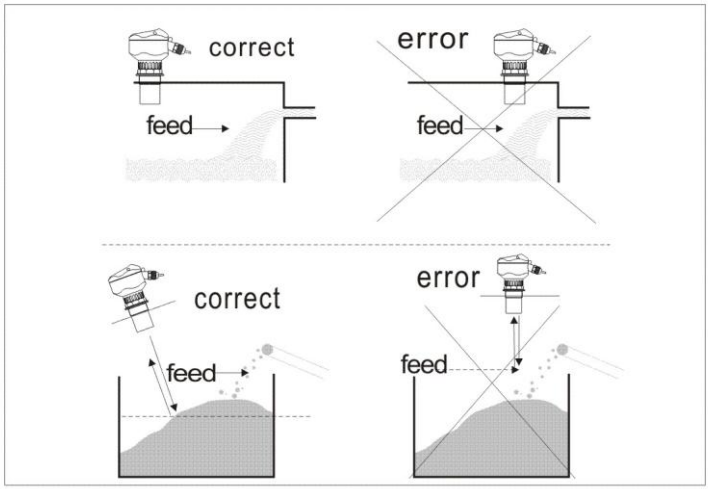

Do not install the sensor above the filling material or in it

There are some adhesive medium within the container, such as storage tanks of crude oil, mud tanks and bitumen tanks, cement mixing tank. If the installation distance of sensor is close to the wall, then the adhesive medium on the container wall will create strong false echo, so the sensor must keep some distance away from the wall.

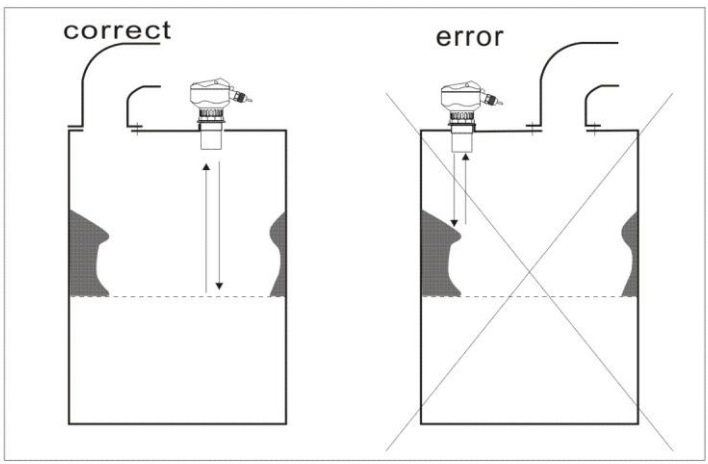

the adhesive medium on the wall of container--- must be away from it

Within the reservoir, generally installation height of instrument depends on the maximum water level. Pay attention to the distance between the max water level and probe. When low water levels exposed gap objects under the pool, this edge need to block with deflector。

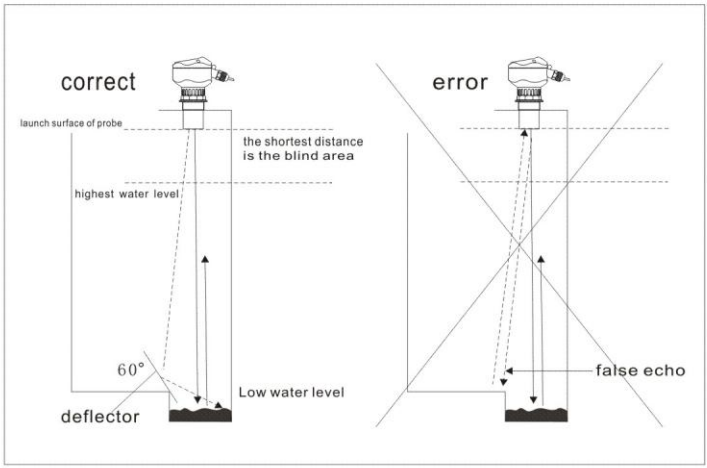

the Obstructions of bottom pool---with the deflector

If there is strong backset within the container cased by blender, strong chemical reactions, the measurement will be difficult. The best way: sensor probe can be installed in the wave guide or bypass pipe to measure.

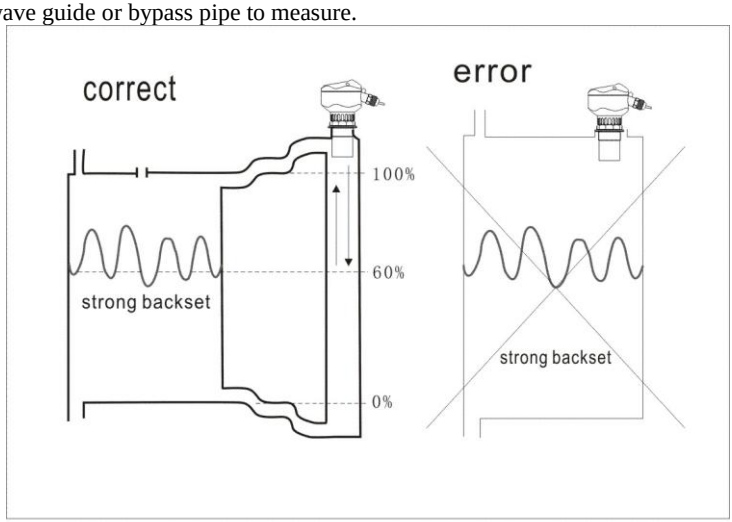

strong backset on the media surface---use the wave guide or bypass pipe to measure

4. 3. 3. 2 Common installation errors

①Bubbles：If the bubbles on the media surface are so big and thick, it will have measurement errors, even can't receive the ultrasound of reflection.

Please take some steps to block more bubbles or measured by installation in the bypass tube. Also you also adapt other instrument of different measured principles, such

as capacitive or hydrostatic.

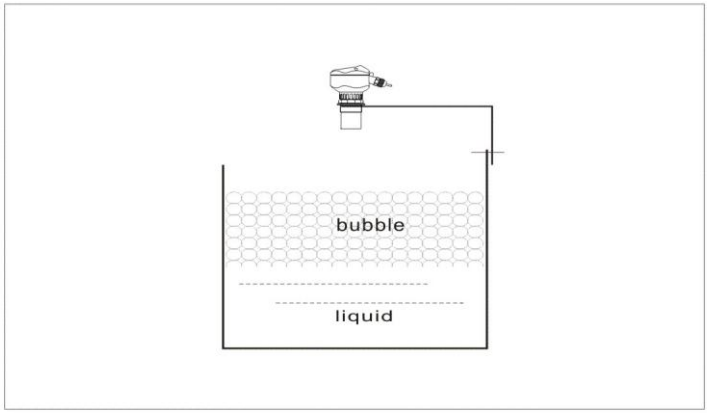

the occasions have some bubbles

②Wrong direction of sensor installation

The sensor installation don't aim at the media surface, it will reduce the measured signal. To ensure the best measured result, please make the axis of sensor aim the media surface (perpendicular to the surfaces of measured interface).

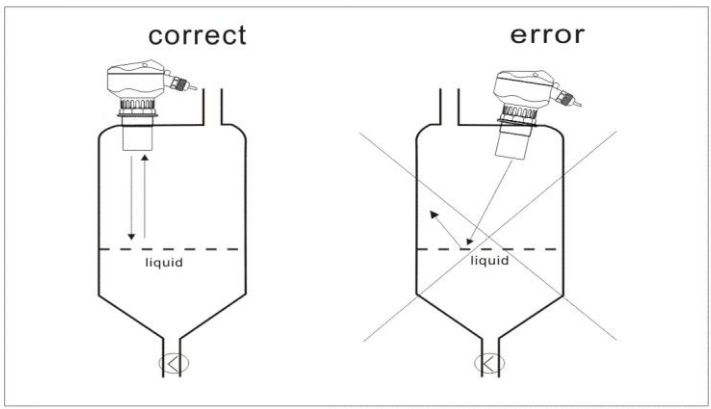

The probe should be perpendicular to the surfaces of media

③ Install the location of large temperature changes

Location of large changes about temperature, please install the sun visor to resolve this situation. Such as: intense solar radiation cause measurement errors.

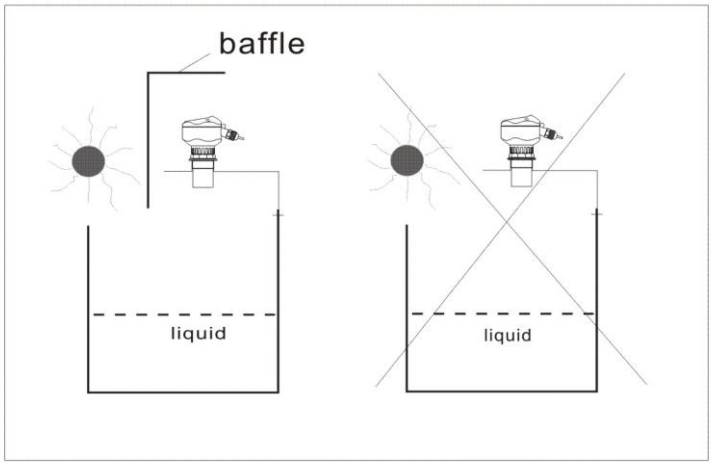

the changes a lot of temperature---with the sun visor or instrument box

④the short distance between the probe and media is less than blind area

If the distance between the probe and the highest position of media is less than blind area of instrument, so the measured value is wrong.

⑤ Too close distance from sensor to container wall

If the installation distance between sensors and wall is too close. It will produce strong false echoes. Container wall with rugged surfaces, adhesion of media and rivets, screws, reinforced bars and weld on it, will cause very strong false echoes and loaded on effective signal.

Please note: the maximum measured distance as required, keep distance between sensor and container wall and check the following table.

Max range	Distance	Max range	Distance	Max range	Distance
5m	0.5m	10m	1.0m	15m	1.5m
Max range	Distance	Max range	Distance	Max range	Distance
20m	2m	30m	3m	40m	4m

For the worst measured conditions, expand the distance between sensor and the container wall until no false echoes.

4. 4 Wiring

★Tip: As the split type, the cable length of connection probe and mainframe is should be confirmed in advance. Do not use other cables to connect on the scene. It will affect the quality and strength of transmission signal.

★ When connected power, do not put AC connect any other terminals expect the AC terminal. Otherwise it will burn circuits or components.

★ The output terminals of 485, 232, 4-20mA can’t be short-circuited, because short circuit will burn the internal circuit.

(1) Wiring of Split type (single channel) ：

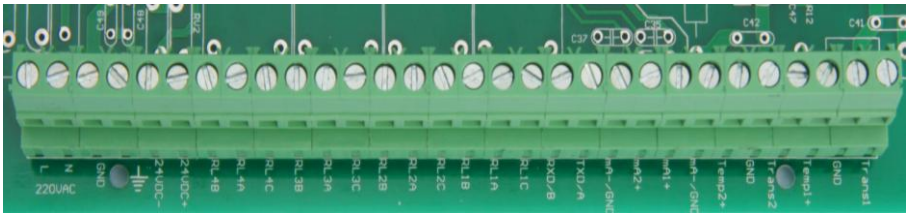

Terminal of split type (single channel)

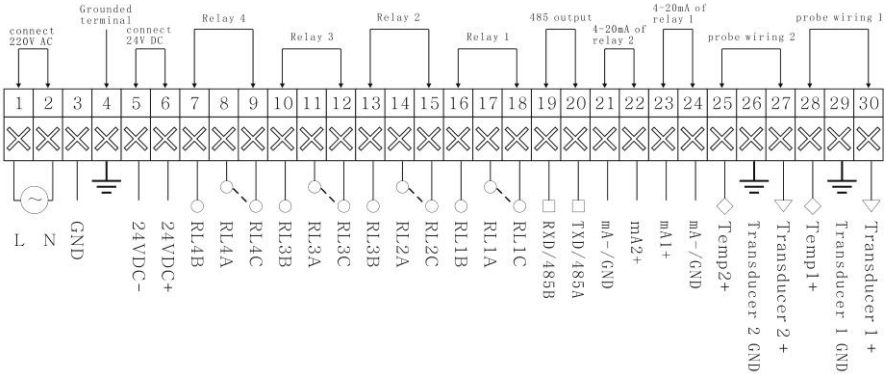

Wiring instruction:

Grounding: First ground terminal of instrument must be grounded actually. Do not share the ground terminal with other devices. Pick up 4th Terminal.

Transducer：Red: Trans_1 transducer1

Blue: Temp 1 + temperature sensor +

Black： GND earth wire

Output： “current＋” connect mA +;

“current－” connect mA-/GND

Relay：RLlnA and RLnB show open;

If default state is open，please connect RLlnA and RLnB.

RLnA and RLnC show closed.

If default state is closed，please connect RLlnA and RLnC.

Power: power supply is AC: L, N

power DC power: 24V+ connect 24VDC+, GND connect 24V DC-

(2) Integrated type：

◆Integrated type (four-wire system)

Wiring of electric (four-wire system)

Wiring of 24VDC (four-wire system)

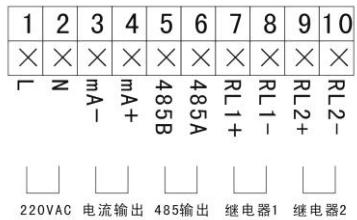

Wiring of 220VAC (four-wire system)

◆Integrated type (two-wire system)

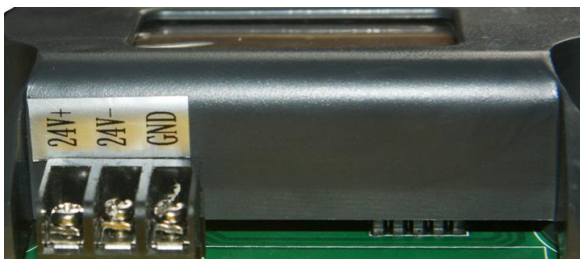

Wiring of electric (two-wire system)

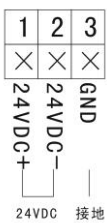

Wiring of two-wire system

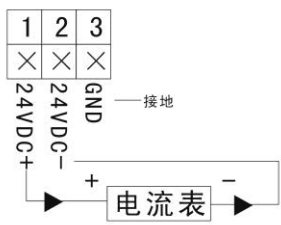

Current of two-wire system

◆ Integrated anti-explosive type (four-wire system)

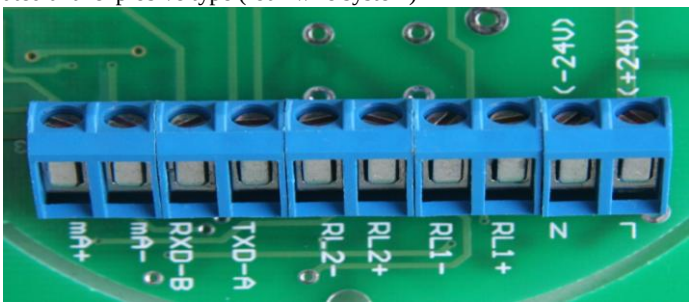

Wiring of electric (four-wire system)

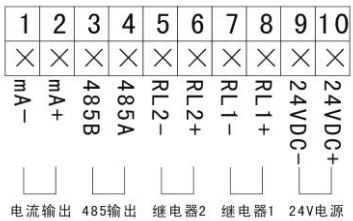

Wiring of 24VDC (four-wire system)

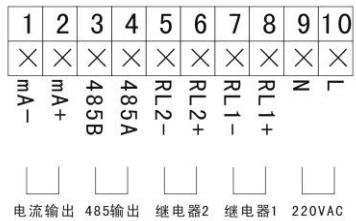

Wiring of 220VAC (four-wire system)

◆Integrated anti-explosive type (two-wire system)

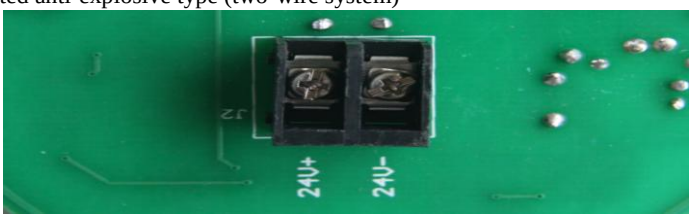

Wiring of electric (two-wire system)

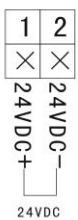

Wiring of 24VDC (two-wire system)

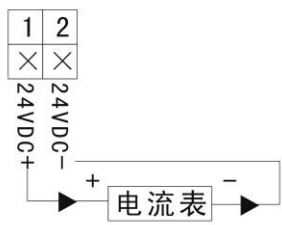

Current of two-wire system

Five. Setup

5.1 The introduction of running mode:

This series of ultrasonic level meter has two modes: Running mode and Setup mode.

After switched on and complete the initialization process, material level meter will enter running mode automatically and start to measure data. Meanwhile measurement model is material level mode, output is 4 -20mA. Current output is proportional to the sludge level.

The interface of running mode is following:

Chinese display English display

Six. Operating instructions of Menu interface

Menu mode: Expert setup mode and Simple setup mode.

The table of simple setting mode, please check the Home.

The table of expert setting mode, please check the Appendix.

The interface and operation instruction of expert mode settings is as below:

①Enter to the running mode, press SET key, then come to first lever menu.

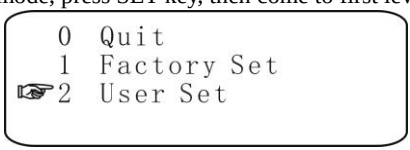

②The first level menu instruction:

◆ the first level menu of No locked parameters

1. Move"▲"key and"▼"key , then modify the menu , press "SET" key enter and back this menu.

2. Back to menu, press "SET" key.

```
☞0  Quit
 1  Parameter Lock
 2  Range Set
 3  Measure Type
```

```
 4  Transducer Set
 5  Algorithm Select
 6  Alarm Setting
 7  Calibration
```

```
 8  Communication
 9  Reset Selection
```

◆ the first level menu of locked parameters

```
☞0  Quit
 1  Unlock
 2  Lock
```

◆ **"0 finish the set"**

Select this key, press the SET key and back the running mode.

```
☞0  Quit
```

◆ **"2 Lock"**

After set all the parameters, you can lock the menu, so it can't be changed by others. You can start to operate the menu when you input the password. The factory default password is 25, which can be modified by user. (Note: please remember the password by yourself, contact the factory after forgot the password.)

"1 Unlock": The menu doesn't lock, it can be allowed to change by others.

```
☞0  Quit
 1  Unlock
 2  Lock
```

→

```
Password Set
25
```

★The parameters is locked, press SET key and enter the unlock interface.

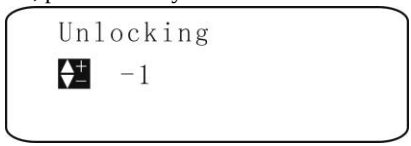

◆ “2 Range Setting”

Reference zero, Low range, High range, Unit

Reference zero: Settings interface reference zero, this is meaningful when material level measurements.

The factory default is the biggest range.

Low point range: Set the measured value corresponding output 4mA.

The factory default is 0.

High point range: Set the measured value corresponding output 20mA.

The factory default is maximum range.

Unit: m、cm、mm，the factory default is m。

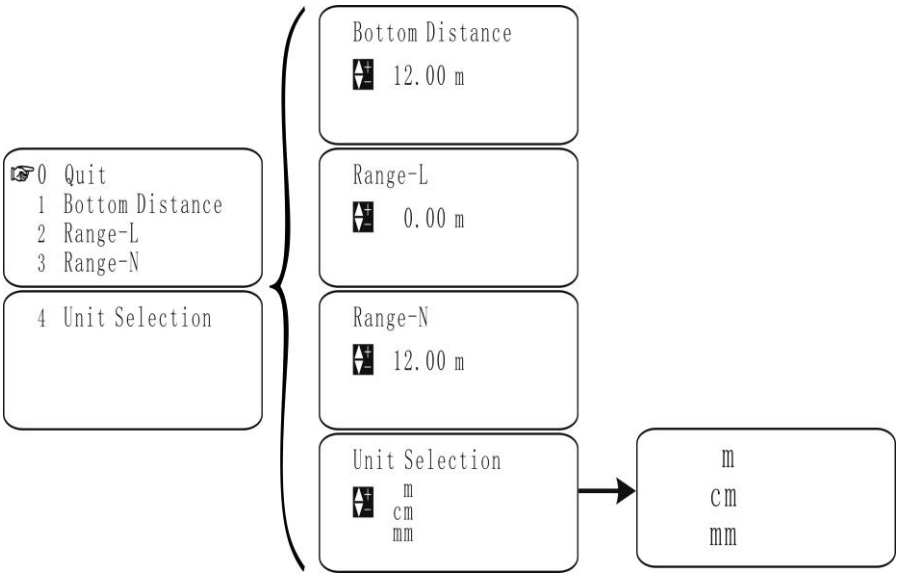

◆ “3 Measurement mode”

Mode Selection: Distance measurement and Material level measurement.

Distance measurement: display value of the distance from probe to measured interface.

Material level measurement: display value of the distance (the height of level) from reference zero to level.

The factory default is material level measurement.

Response speed: Slow, Medium, Fast.

Slow: Slow response rate, high measurement precision, No interference

Medium: the middle of slow and fast.

Fast: Fast response rate, high measurement precision, interference.
The factory default is medium.

Safe Level: Maintain、Minimum, Maximum, Set value.

Maintain: After lost wave, the display value is the final measured values, the current for the corresponding value.

Minimum: After lost wave, the display value is 4mA, current is 4mA Maximum: After lost wave, the display value is 20mA, current is 20mA

Setting: After lost wave, the display value is the final measured value, the output is setting value of current.

The factory default is maintain.

Current Set: After lost wave, set the output current and its parameter is more then 3.6mA, less than 22mA. Then select one of them: Maintain、Minimum, Maximum and no effect.
The factory default is 3.6mA。

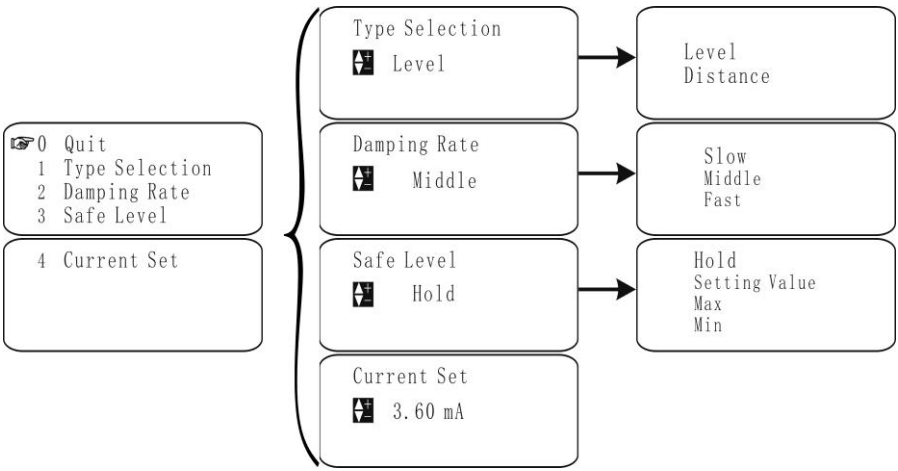

◆“4 Probe setting” (DO NOT Modify them)

Probe selection and setup parameters.

1.Probe selection: nine options can be selected from 1 to 9, according to the label on the probe. The factory default is 5.

2. Blind setting: Set the proximal blind of probe, the factory default is 0.30.

3. Short sensitivity: Please don’t modify by yourself, modify under the guidance of professional and technical person

4. Short threshold: Please don’t modify by yourself, modify under the guidance of professional and technical person

5. Long sensitivity: Please don’t modify by yourself, modify under the guidance of professional and technical person

6. Long threshold: Please don’t modify by yourself, modify under the guidance of professional and technical person

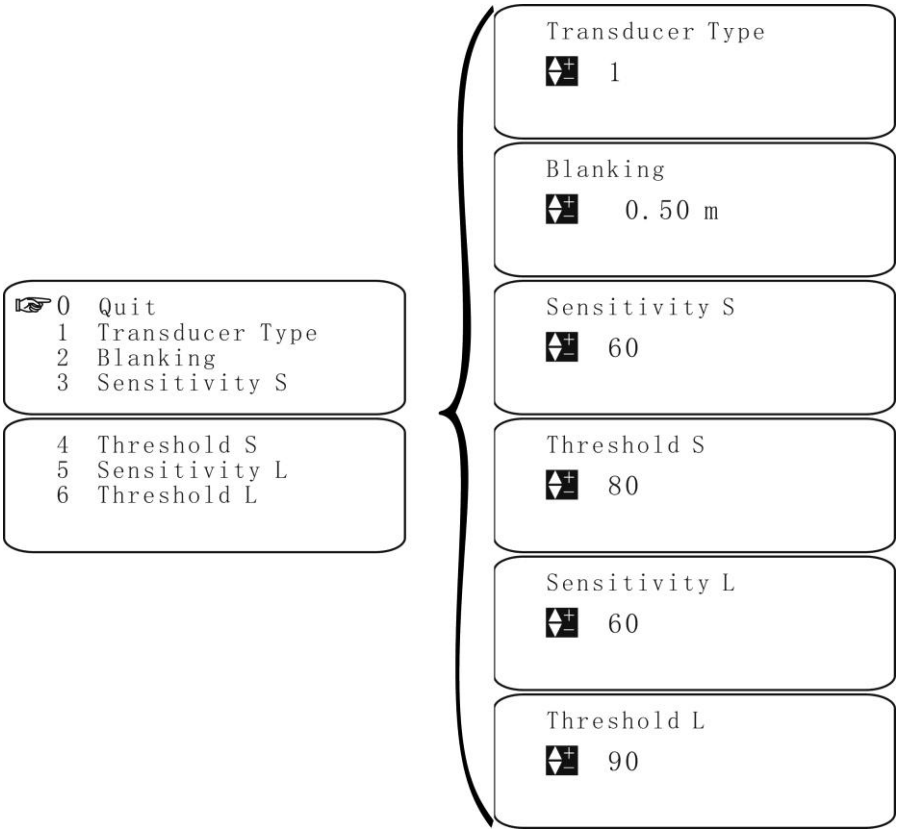

◆“ 5 Algorithm selection” (DO NOT Modify them)

Options: special environment 1, special environment 2
special environment 3, special environment 4,
special environment 5, special environment 6,
special environment 7.

The factory default is special environment 7.

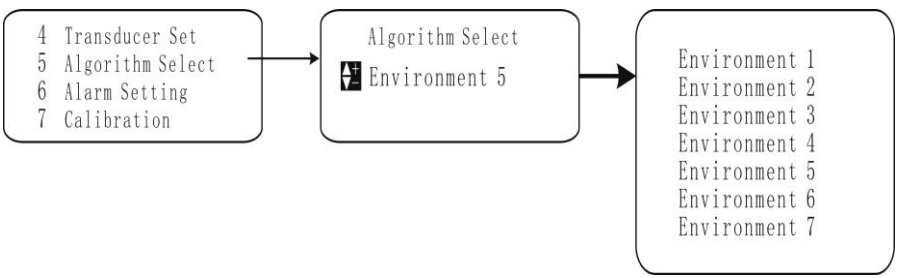

◆ “6 Alarm setting” Set the alarm of delay.

Alarm 1 mode: Closed, Low alarm, High alarm.
Closed: No function of Relay 1
Low alarm: Low alarm of Relay 1 ;
High alarm: High alarm of Relay 1。
The factory default is closed.
The alarm 1 value: Units as M, the factory default is 0.
The alarm 1 difference: Units as M, when alarm need to be cancel, the measured value (alarm value+/-difference value) is effective.
The factory default is 0.
Mode of alarm 2, alarm 3, 4 alarm setting is the same as above.

Alarm difference also makes a relay to control the whole process of the water pump from low level to high level.

1.Eg:used for the water discharge: the water level is less than 1m, the pump stop working; the water level rises to 5m, the pump starts to work.

The specific setting is as bellow:

Alarm 1 mode: High Alarm。Value:5.00m; Difference:4.00m。

2.Eg:used for the adding water: the water level is less than 1m, the pump start to add the water; the water level rise to 5m, the pump stop working.。

The specific setting is as bellow:

Alarm 1 mode: Low Alarm。Value:1.00m; Difference:4.00m。

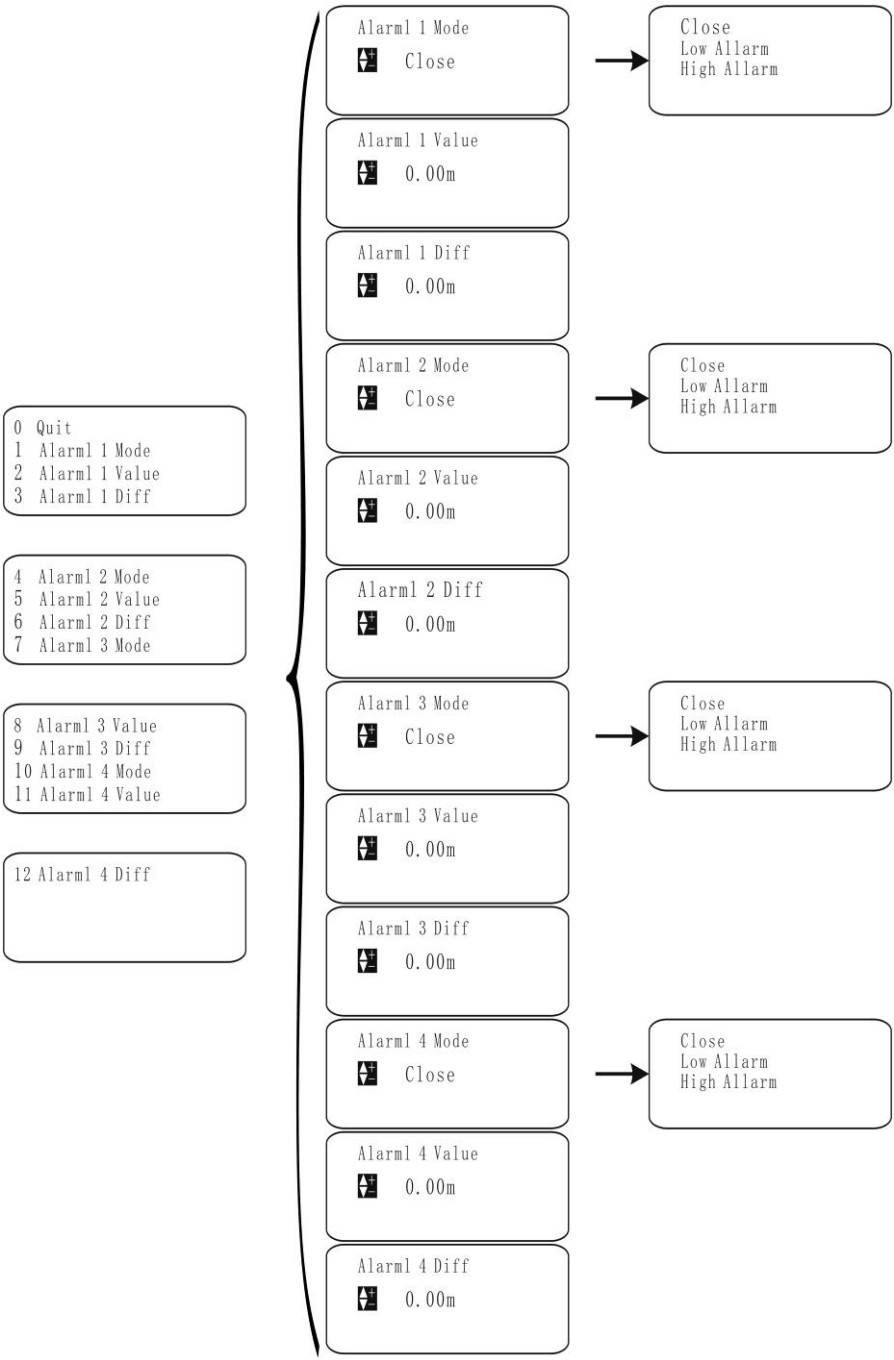
0 Quit
1 Alarml 1 Mode
2 Alarml 1 Value
3 Alarml 1 Diff
4 Alarml 2 Mode
5 Alarml 2 Value
6 Alarml 2 Diff
7 Alarml 3 Mode
8 Alarml 3 Value
9 Alarml 3 Diff
10 Alarml 4 Mode
11 Alarml 4 Value
12 Alarml 4 Diff
Alarml 1 Mode
Close
Alarml 1 Value
0.00m
Alarml 1 Diff
0.00m
Alarml 2 Mode
Close
Alarml 2 Value
0.00m
Alarml 2 Diff
0.00m
Alarml 3 Mode
Close
Alarml 3 Value
0.00m
Alarml 3 Diff
0.00m
Alarml 4 Mode
Close
Alarml 4 Value
0.00m
Alarml 4 Diff
0.00m
Close
Low Allarm
High Allarm
Close
Low Allarm
High Allarm
Close
Low Allarm
High Allarm
Close
Low Allarm
High Allarm

◆"7 Parameters Calibration: DO NOT Modify these Parameters)

Range calibration: Input the actual value, the system calibrates range automatically. The factory default is the measured value.

Sound calibration: Input the actual value, the system calibrates sound velocity automatically. The application of occasions is escaping gas expect air.(such as the gasoline, acetone, alcohol and so on), the propagation velocity of sound is different through these occasions, so that need to calibrate.

4mA calibration: Modify the value until the actual output current for 4mA.The factory default value is 3100.

20mA calibration: Modify the value until the actual output current for 20mA. The factory default value is 7200.

Voltage: Enter the appropriate voltage values of measured at test point. The factory default value is 5.00.

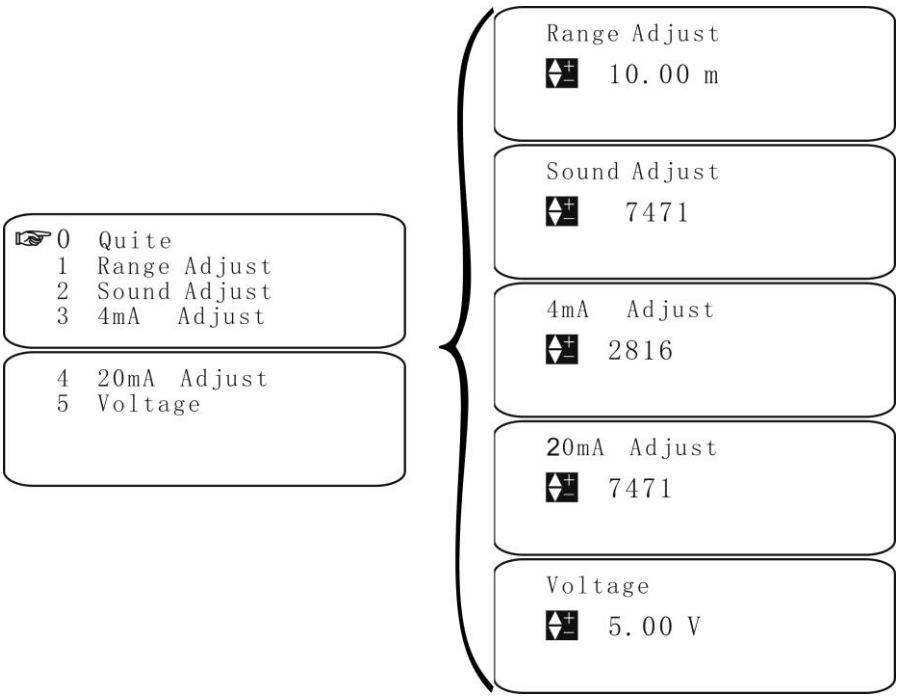

◆**" 8 Communication settings"**

Address: Select the communication address, the factory default is 1.

Baud rate: There are four types of baud rate include 2400,4800,9600 and 19200 to select, the factory default value is 9600.

Working mode: working mode of communication: automatic reporting", "query",
The factory default is "automatic reporting".

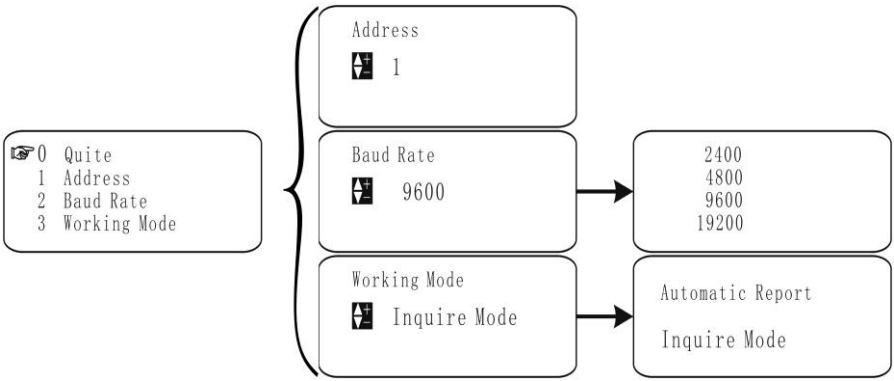

◆ "9 Reset"

Factory Reset: Yes: Restored to the state of factory setting。No: exit。The default setting is No.

System Reset: Yes: Restored to the state of factory setting。No: exit。The default setting is No. (Do not modify it)

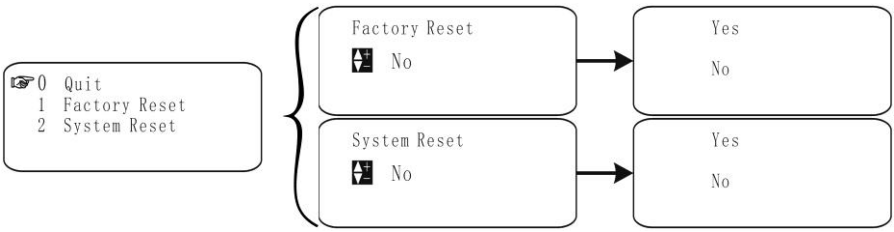

Seven. Troubleshooting Symptoms and Solutions

Symptom	Reason	Solution
Failure work	Not connect power cord .	Check the power line
The material level is running, this mark “ ” which showed on the screen doesn’t change, it means the system is in the state of lost wave.	1. Measured distance beyond the range of product	1.Consider the longer range
	2. Measured medium have strong interference, vibration or more foam.	2. Waiting for calm of the material, the device will return to normal measurement.
	3. There are interference sources such as frequency converter, motor and so on in the environment.	3. Check the surrounding environment and shield the electromagnetic. Do not use the same power with frequency converter, motor and reliable grounding. The input and output line can’t share one channel with inverter, motor, or galvanized pipe wear protection separately.
	4. The probe doesn’t aimed at the surface of measured .	4. Reinstall the probe, make sure to perpendicular to the surface mud.
	5. Measured space has unnecessary object, such as trash and so on.	5.Choose new installation position to avoid to appear interference.
	6. Enter blind area.	6. Raise the probe installation position or make mud position lower
	7. Measured liquid contains a lot of foam, turbulence or sediment.	7. Eliminate foam can consult manufacturer.
	8.No echoes.	8.the probe is sloping, not aimed at the target

Operating instructions of
Ultrasonic Level Difference Meter menu

The ultrasonic level difference meter which has Chinese and English menu and simple setup, can meet different requirements from customer. Normally, after followed installation instruction, then set several parameters, it will start to work.

Simple operation：

1. Key: Our products can be debugged through three keys on the panel. Then, the measured value is showed by LED.

SET key	▼ ▲ key
◇Enter to menu	◇Move the cursor
◇Confirm menu	◇Select the menu
◇Confirm parameter calibration	◇parameter calibration

2. After switched on of our product, press the SET key for two second and enter the first level menu.
3. The height value of probe(No.1) inputs to the “reference zero 1”, the “reference zero 1"position can be found structure table in the menu. (the height of probe is the distance from the launch surface of probe to the bottom).
4. The height value of probe(No.2) inputs to the “reference zero 2”. the “reference zero 2"position can be found structure photo of the menu.
5. Set “4mA ”corresponds difference value and "20mA corresponds difference value.

4mA corresponds difference value ： output is 4mA, when the difference value equal to setting value.

20mA corresponds difference value： output is 20mA, when the difference value equal to setting value.

“As the corresponds difference value and "20mA corresponds difference value, please check the structure photo of menu.

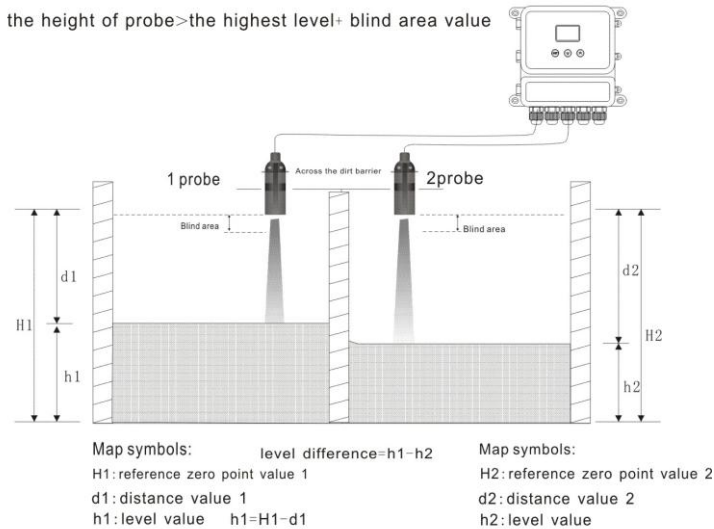

One. Application

Ultrasonic level difference meter (material, liquid), is used to measure height differences of level or material level in the two different of containers.

Two. Technical data

Function	Spilt Type
Standard Range	5m、10m、15m、20m
Special range	1m、30m 、40m、50m、60m
Accuracy	0.25%-0.5%
Resolution	3mm or 0.1%（bigger）
Display	12,864 dot matrix LCD
Analog output	2 types 4～20mA/510Ω load
Delay output	2 groups AC 250V/ 8A or DC 30V/ 5A Programmable（optional）
Power	220V AC±15% 50Hz or24VDC 120mA (optional)
Ambient temperature	LED(transmitter):-20～+60℃, probe(sensor):-20～+80℃
Communication	485
Protection Class	LED: IP65， probe: IP68
Probe cable	Standard: 10m, longest: 200m.
Probe installation	According to range and probe type

Three. Wiring

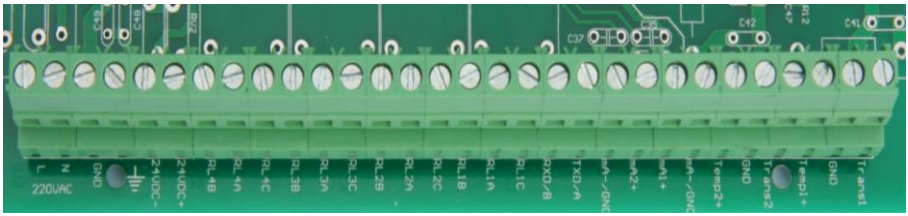

Figure 3.1 Electrical wiring of ultrasonic level difference meter

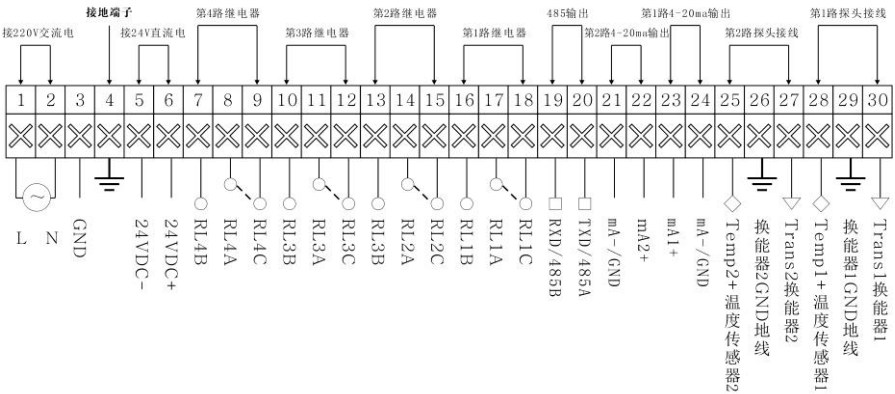

Figure 3.2 Terminal of ultrasonic level difference meter

Wiring instruction

Grounding: First ground terminal of instrument must be grounded actually. Do not share the ground terminal with other devices. Pick up 4th Terminal.

Transducer: Red: Trans_n transducer n
Blue: Temp n + temperature sensor +
Black: GND earth wire
single probe: n=1, double probes, n=1,2

Current: "current＋" connect mA n+;
"current－" connect mA n-/GND
single probe: n=1, double probes, n=1,2

Relay: RLlnA and RLnB show open;
RLnA and RLnC show closed.
Single probe: n=1,2 double probes, n=1,2,3,4

Power: power AC connect L, N
power DC: 24V+ connect 24VDC+,
GND connect 24VDC-

Note:

① Delay 1 is used for probe1 alarm, delay 2 is used for probe2 alarm.
Delay 3 and delay 4 are used for difference alarm.

② ★ The output of mA1+ and mA- is difference current.
The default output of mA2+ and mA- is probe 2 current or choose the probe 1 current.(select from "9 work mode"-------"2 the output of mA 2")

★ As the running mode of double material level, the output of mA 1+ and mA－is probe 1 current. The output of mA2+ and mA－ is probe 2 current.

Warranty receipt card of ultrasonic level meter and ultrasonic level difference meter

Name			
Address			
contact person		phone	
Product model		Product No.	
Date of acceptance		Installation charge	

Warranty card instructions of ultrasonic level meter

Product model		Product No.	
Date of acceptance		Installation charge	

1、Warranty Policy:

1. Please show warranty card, when user need maintenance. Within the warranty period, the failure caused by normal use can enjoy the free maintenance according to warranty card.
2. The warranty period: product warranty period is commenced from the date of acceptance within 12 months.

The following situation without free warranty:

1. Product or other components beyond the warranty period.
2. Due to the use environment can’t meet product requirements, as a result, the hardware doesn’t work.
3. Due to poor power environment or foreign objects into the devices, as a result, lead the failure or damage.
4. Due to failure to follow them according to operation manual and considerations, as a result, lead the failure.
5. Due to force majeure factors such as lightning, water, fire and other natural factors, as a result, lead the failure.
6. Due to unauthorized repair, unauthorized modifications, abuse, as a result, lead the failure.

Restriction notes:

1. Please keep these instructions warranty card safe, lost without payment.

The authority for the interpretation of this warranty card belongs to our company, we have the right to modify the content of this card without prior notice.